Draw a Pickup Truck

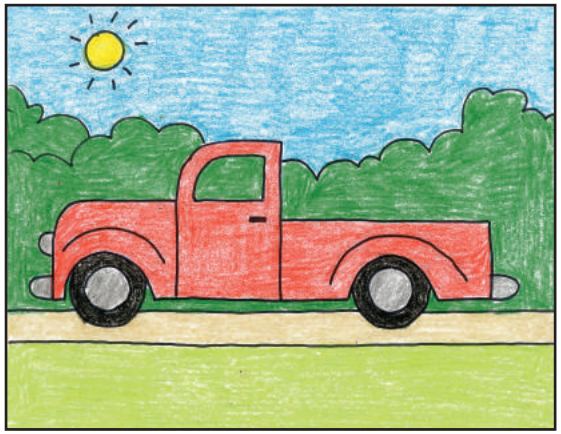

Supplies: Marker, crayons

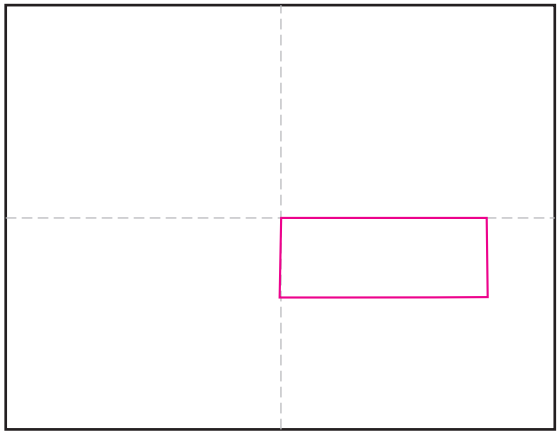

1. Make the guide lines. Draw a rectangle.

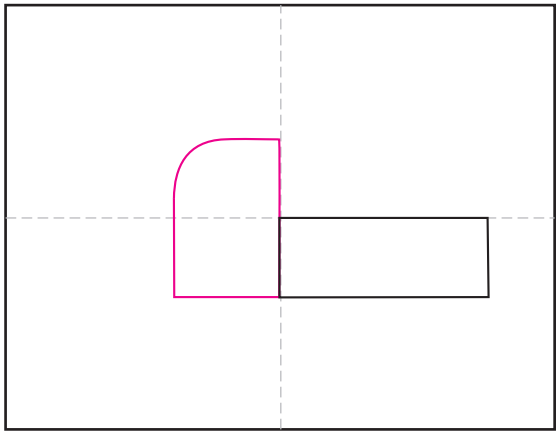

2. Add the cab.

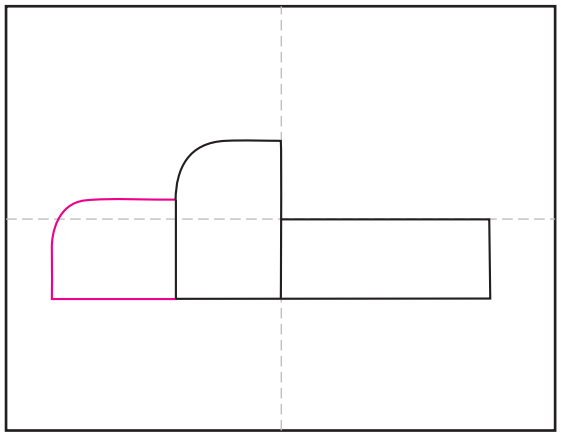

3. Add the truck front.

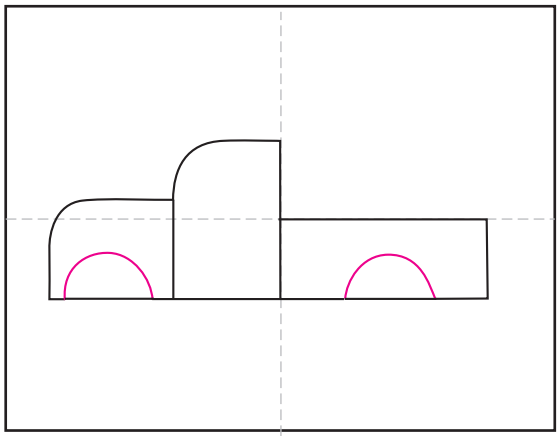

4. Draw two half circles for the wheels.

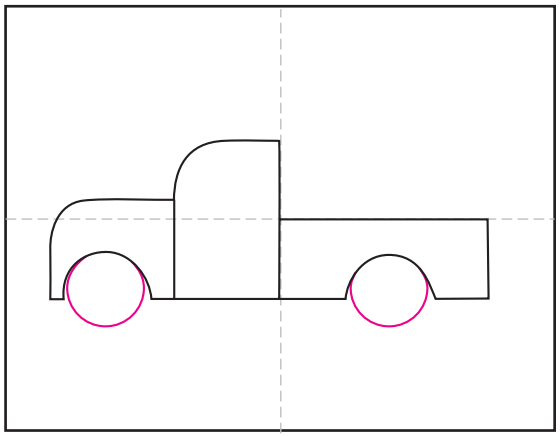

5. Erase inside lines. Add round circle tires.

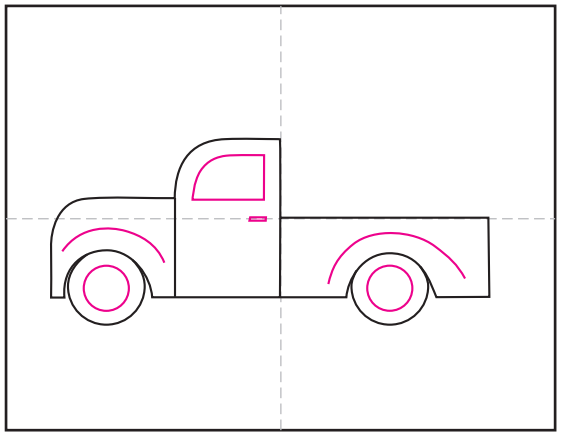

6. Add inside car details as shown.

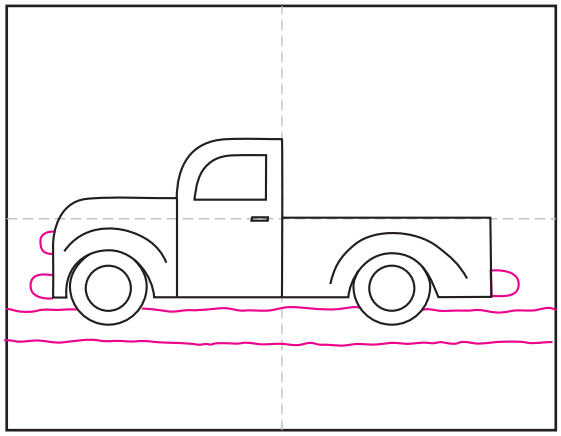

7. Add outside car details. Draw the road.

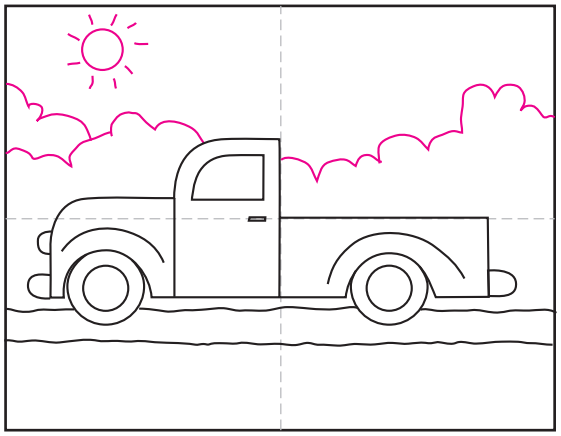

8. Finish with trees and sun.

© 2017 www.artprojectsforkids.org

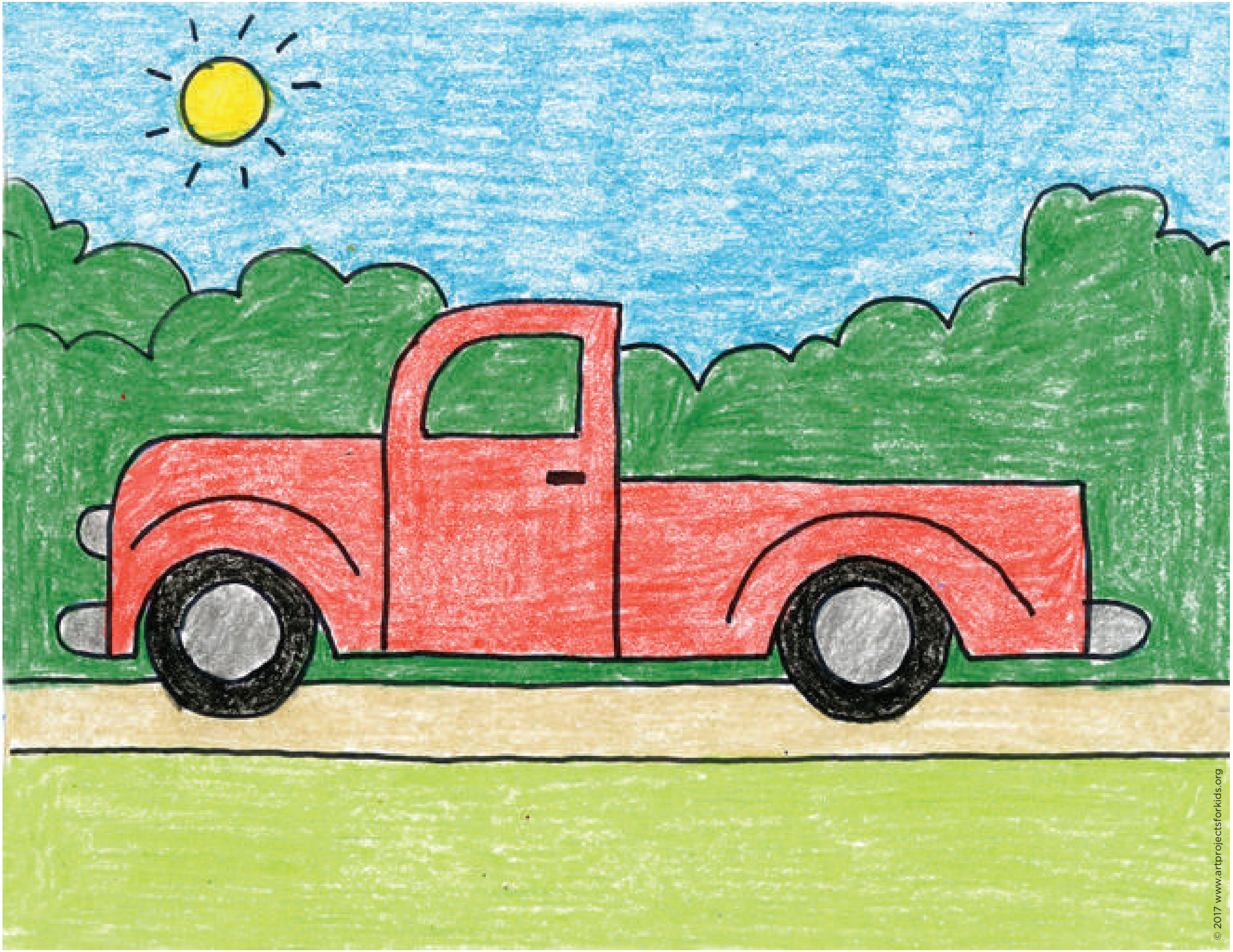
© 2017 www.artprojectsforkids.org